Loan Container Incoming Inspection

VADER® Pedicle System Cement Sleeve

VADER® Pedicle System Cement Sleeve S

VADER® Pedicle System Cement Sleeve MIS

confidential, property of icotec ag, Switzerland

Overview Instrumentation

VADER® Pedicle System Cement Sleeve

42-430

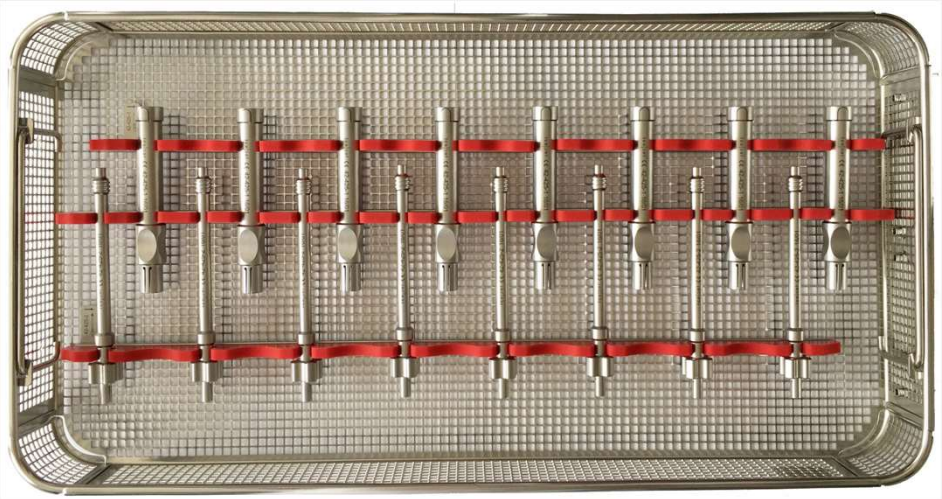

VADER® Pedicle System Cement Sleeve S

42-930

VADER® Pedicle System Cement Sleeve MIS

42-730

Overview Inspection Aids

- **Screw Ø 5.5 × 45 mm (H286)**
- **Cement Cannula (H290)**

General Control

- **Do the contents of the container correspond to the kit profile?**
- **Are the instruments intact (not clearly damaged)?**
- **Is the laser marking legible/the data matrix code visible?**
  - Instruments where the laser marking is no longer legible must be replaced.
  - Instruments where the data matrix code (UDI) is no longer visible must be replaced. (When available, a scanner can be used to check the data matrix code.)

- **Movable parts/joints – maintenance using surgical instrument oil!**

  → **Functional inspections for instruments** (see following pages)

- **If an instrument is replaced, all tests involving this instrument have to be repeated.**
- **Instructions for Reprocessing: 0240US, 0241US**

Outer Alignment Sleeve (42-425-1) and Cannula Guiding Sleeve (42-425-2)

- Cannula guide sleeve must not fall out of the outer alignment sleeve under its own weight
- Cannula guiding sleeve can be screwed into the outer alignment sleeve with low friction
- Can be mounted on screw Ø 5.5 × 45 mm (H286) and tightened together

- Visual check whether cannulation is free
- The cement cannula (42-420 / H290) can be inserted into the cannula guide sleeve until the snappers of the cannula guiding sleeve snap into the groove of the cement cannula

Cement Cannula Sleeve MIS (42-925)

- Can be mounted on screw Ø 5.5 × 45 mm (H286) and tightened

- Visual check whether cannulation is free
- The cement cannula (42-420 / H290) can be inserted into the cement cannula sleeve MIS until the snappers of the cement cannula sleeve MIS snap into the groove of the cement cannula

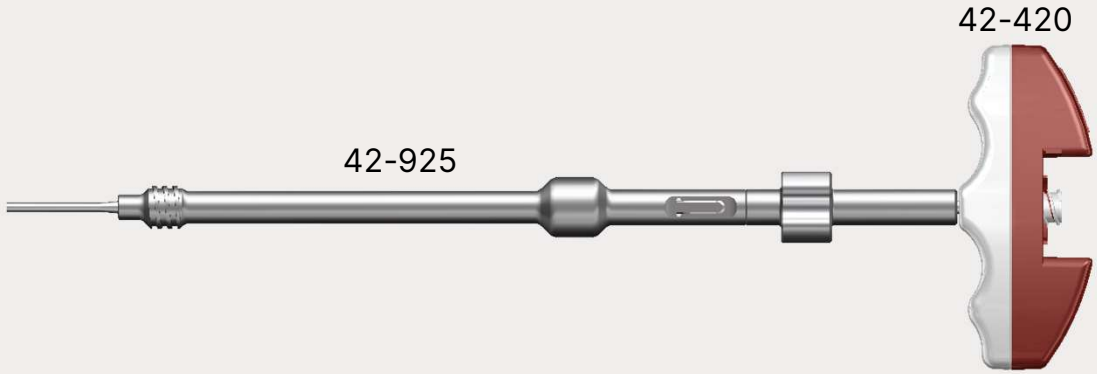

0200US.2025-06